Installation and Service Instructions

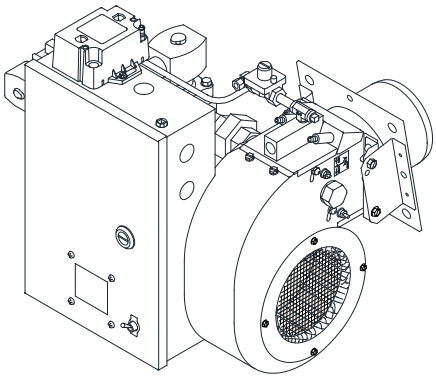

Incinomite J81A-3 and J121A-3

Incinerator Gas Burners

The INCINOMITE Models J81A-3 and J121A-3 incinerator gas burners feature continuously monitored electronic flame safety and spark ignited intermittent proven ignitor (pilot). They are adaptable to either primary or secondary chamber installation.

⚠ WARNING: If the information in these instructions is not followed exactly, a fire or explosion may result, causing property damage, personal injury or death.

Do not store or use gasoline or other flammable vapors and liquids in the vicinity of this or any other appliance.

WHAT TO DO IF YOU SMELL GAS:

- Do not try to light any appliance.
- Do not touch any electrical switch; do not use any phone in your building.
- Immediately phone your gas supplier from another building. Follow the gas supplier's instructions. If you cannot reach your gas supplier call the fire department.

Installation and service must be performed by a qualified installer, service agency or the gas supplier.

- In the United States, installation must conform with local codes or in the absence of local codes, with the National Fuel Gas Code, ANSI Z223.1-latest edition available from American National Standard Institute. Further reference should be made to the recommendation of your fuel supplier.
- In Canada, installation must conform with local codes or in the absence of local codes, with Installation Codes for Gas Burning Appliances and Equipment, CGA Standard CAN/CGA 1-B-149.1 or 2.
- ⚠ **WARNING: Additions, changes, conversions and service must be performed by an authorized Midco representative, service agency or the fuel supplier. Use only MIDCO specified and approved parts.**
- INSTALLER: Inform and demonstrate to the user the correct operation and maintenance of the gas utilization equipment. Inform the user of the hazards of storing flammable liquids and vapors in the vicinity of this gas utilization equipment and remove such hazards. Affix this manual and associated literature to the burner.

  CODE COMPLIANCE IS THE SOLE RESPONSIBILITY OF THE INSTALLER.
- USER: Retain this manual for future reference. If other than routine service or maintenance as described in this manual and associated literature is required, contact a qualified service agency. DO NOT ATTEMPT REPAIRS. An inadvertent service error could result in a dangerous condition.

AVOID ERROR IN PARTS SELECTION. When ordering use complete MIDCO Part Number and Description. Furnish Burner Model Number, Bill of Material Number and Serial Number (if available) from the specification plate found on the product.

IMPORTANT: Availability of parts as well as specifications are subject to change without notice. Please consult factory for item availability.

BURNER MODEL: _____

BILL OF MATERIAL NUMBER: _____

SERIAL NUMBER #: _____

WIRING DIAGRAM: _____

FOR SERVICE CONTACT

Name: _____

Address: _____

_____

Phone: _____

Date of Installation: _____

SAFETY INFORMATION TERMS: The following terms are used to identify hazards, safety precaution of special notations and have standard meanings throughout this manual. They are printed in all capital letters using a bold type face as shown below, and preceded by the exclamation mark symbol. When you see the safety alert symbol and one of the safety information terms as shown below, be aware of the hazard potential.

⚠

DANGER: Identifies the most serious hazards which will result in severe personal injury or death.
WARNING: Signifies a hazard that could result in personal injury or death.
CAUTION: Identifies unsafe practices which would result in minor personal injury or product and property damage.

Midco® International Inc.
4140 West Victoria Street
Chicago, Illinois 60646
toll free 866.705.0514
tel 773.604.8700
fax 773.604.4070
web www.midcointernational.com
e-mail sales@midcointernational.com

Quality Designed for Proven Performance

722
8470 70
Printed in USA

Specifications

Specifications [1]

Burner Air Delivery (Approximate Air Delivery at Zero Draft)
J81A-3…….. 90 SCFM [2]
J121A-3…… 180 SCFM
Minimum Gas Pressure Listed For Purpose of Input Adjustment
(Take Pressure at Inlet Tap of Main Automatic Valve)
Natural……... 5.5″ W. C .
Propane…….. 8.0″ W. C .
Burner Firing Rate (Natural or Propane) [3]
All Ratings Based on 1000 BTU/cu. ft. Natural, 2500 BTU/cu. ft. Propane at Sea Level
Minimum
J81A-3 or J121A-3…… 100 MBH [4]
Maximum (With Combustion Air From Burner Only)
J81A-3
20% Excess Air……... 450 MBH
0% Excess Air (stoichiometric)…….. 540 MBH
J121A-3
20% Excess Air……. 900 MBH
0% Excess Air……... 1080 MBH
Maximum (With Combustion Air From Burner Blower and Additional Air Available in Combustion Chamber.)
Natural Gas 5.5″ W.C. or Propane Gas at 11.0″ W.C. Gas Pressure at Main Automatic Valve
J81A-3……. 800 MBH
J121A-3…….. 1,200 MBH
Electrical Supply
J81A-3……..... 120/1/60; 3 amps
J121A-3……..... 120/1/60; 4.5 amps
Burner On-Off Control……..... Toggle Switch. (Optional 0 to 6 Hr. Manual Timer [5])
Flame Safety……..... Electronic Flame Safety with spark ignited ignitor (pilot) and 100% shut-off.
Optional Weatherhood [5]
Adjustable Firing Angle……..... Mounting Flange adjustable for horizontal or 10° down firing.

NOTE: Burner components are UL recognized, CGA listed, CSA certified and/or AGA design certified, mounted and wired. The complete burner is fire tested.

[1] Standard burners are shipped as NATURAL gas models. A kit is available for field conversion to PROPANE gas.
[2] SCFM = Standard Cubic Feet/Minute.
[3] **NOTE**: Firing rate with combustion air from burner blower only is based on using standard air at sea level with zero draft over-fire. Derate burner for altitudes over 2,000 feet by 4% for each 1000 feet above sea level.
[4] 100 MBH = 100,000 BTU/Hr.
[5] Kit is available for field installation.

Installation

I Primary Chamber Fuel Input

No. 1 Waste: Primarily dry material such as paper, rags and wood. Burner normally required only for light-off.

No. 2 Waste: Consisting of approximately equal portions, by weight of No. 1 and No. 3 waste; 70 lbs. per 100 MBH.

No. 3 Waste: Wet material such as garbage; 25 lbs. per 100 MBH.

No. 4 Waste: Organic materials such as small carcasses and waste from hospital operating rooms or pathological laboratories; 13 lbs. per 100 MBH.

NOTE: The burner input required for the secondary chamber must be determined from the heat required to maintain the discharge temperature of the flue products as specified by the EPA for the type of waste involved and the location of the incinerator.

II Indoor Ventilation

Make sure that the incinerator room has sufficient ventilation to provide the necessary combustion air for the burner fuel, the waste material and any other appliance that would draw its air from the same enclosed area.

⚠ WARNING: Under no condition should the access to outside air be so restricted that the maximum possible use of combustion air is inhibited. Pay particular attention to exhaust fans that could draw air from the area and create a negative pressure in the room.

III Installation

Install the INCINOMITE burner(s) in location(s) specified by the incinerator manufacturer. It should be positioned approximately level with the top of the highest normal load and fire with or across the draft flow.

If the incinerator is designed only for No. 4 waste, the level can be lowered to bring the flame to play directly on the smaller loads characteristic of this type of operation. The opening through which the burner fires should be of a diameter only large enough to accommodate the Blast Tube (4-1⁄4″ diameter x 3″ minimum long.) Do not allow the Blast Tube to protrude into the incineration chamber. If necessary, build an extension outside of the incinerator wall to increase wall depth.

To change the Mounting Flange to its alternate position, horizontal or 10° down firing, remove the four (4) screws that attach it to the burner, rotate the flange 180° and reinstall the screws.

Before mounting the burner, check that the Blast Tube and Blower Housing are clear of foreign material and that the Main Gas Port and Nozzle Support is clean and undamaged.

If the incinerator is located outdoors, the burner and all of its components, except the Main Manual Shut-Off Valve, must be protected from weather. The MIDCO Accessory Weatherhood will provide such protection.

⚠ CAUTION: If the incinerator is of the down draft design, make sure that a direct draft vent opening of approximately 10 square inches has been put through the top of the drop section(s) to provide for the venting of any gas leakage. See Figure 1.

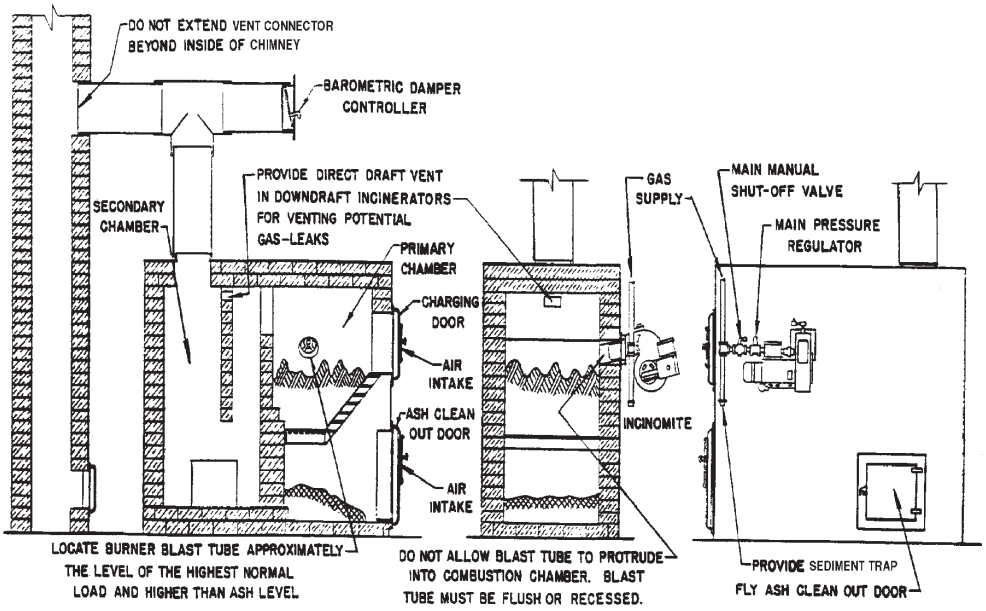

Figure 1 - Typical Installation

IV Chimney, Vent Conanector and Draft Control

The size and type of material used for the vent connector and chimney must conform to the recommendations of the incinerator manufacturer, as well as local and national codes. This is especially true where high flue gas temperatures are encountered.

IV Chimney, Vent Connector and Draft Control Continued

When natural draft is used and the chimney height is over 25 feet, a barometric damper of the same size as the vent connector should be installed. If the chimney is high enough to make it difficult for the barometric to maintain a maximum incineration chamber over-fire draft (0 to minus 0.5″ W.C. for Model J81A-3, 0 to minus 1.0″ W.C. for Model J121A-3), a fixed damper should be installed in the vent connector between the barometric and chimney to restrict the chimney draft to a point within the controlling capacity of the barometric. After final setting, the damper should be permanently fastened into position per ANSI Z223.1-1992 “National Fuel Gas Code”, or latest edition available from American National Standards Institute to prevent tampering.

V Piping

The supply piping to the burner should branch off from the main line as close to the source as possible (NATURAL gas meter or PROPANE tank regulator). When branching off from an existing gas line, do not tap off the bottom of a horizontal section. Use new black pipe and malleable fittings free from cutting and threading burrs or defects.

Use pipe joint compound resistant to liquid petroleum gases when using either NATURAL or PROPANE gas. Piping must comply with the local and national codes. If the burner piping must be rearranged because of space limitations, be sure to carry out the general configuration shown in Figure 3.

A suitable Main Gas Pressure Regulator should be installed as shown in Figures 1 or 3. Choose a regulator(s) to adjust the available gas pressure to the pressure shown in SPECIFICATIONS, page 2.

⚠ CAUTION: The regulated gas pressures must not exceed 14″ W.C. or Main Automatic Gas Valve and Ignitor Regulator will be damaged. If excessive gas pressure is prevalent, the regulator must be a tight shut-off type to prevent high pressures from developing during stand-by. The regulator must have a minimum flow regulating capacity for the ignitor gas rate (see Table 4). It is strongly recommended that a separate smaller regulator be used for ignitor gas, connecting to the gas line ahead of the Main Gas Pressure Regulator and downstream of any intermediate Regulator.

For full input, refer to SPECIFICATIONS, page 2, for minimum gas pressure required. For reduced capacities, refer to Firing Rate Curves, Table 2 or 3.

⚠ CAUTION: If gas supply pressure is below its specified range during adjustment, an over-fire condition could result when pressure returns to normal, particularly if the regulator adjustment screw is bottomed out. ALWAYS confirm that at least the minimum rated pressure is being supplied during regulator adjustments, and NEVER BOTTOM OUT regulator screw.

When selecting the burner supply piping size per Table 1, the permissible pressure drop must be based on the pressure available at the inlet to the supply pipe branch line when all other gas equipment fed by the same source (NATURAL gas meter or PROPANE tank regulator) is firing at full rate. Also take into account any other INCINOMITE burners to be attached to the same branch line.

NPT Pipe Size	Type of Gas	Approximate Capacity - MBH Length of Pipe / Feet 10	20	40	60	100
3/4″	Natural	275	200	130	100	
	Propane	450	300	200	165	125
1″	Natural	520	350	245	195	150
	Propane	820	550	385	300	235
1-1/4″	Natural	1050	730	500	400	300
	Propane	1200	1150	790	630	480
1-1/2″	Natural	1200	1100	760	610	460
	Propane		1200	1200	960	725
2″	Natural		1200	1200	1150	870
	Propane				1200	1200

Capacities shown are for total pressure drop of 0.3″ W.C. For higher permissible pressure drops consult your fuel supplier.
Source: *Gas Engineers Handbook-1974 Industrial Press Inc. NY, NY*

Table 1 - Schedule 40 Pipe Capacities in MBH

V Piping Continued

When pressure testing the supply piping, the burner valve train must be protected. If the test pressure is 0.5 PSIG or less, closing the Main Manual Shut-Off Valve will suffice.

⚠ CAUTION: If the test pressure is over 0.5 PSIG, the test must be made without any burner components connected, including Main and Ignitor Manual Shut-Off Valves.

⚠ WARNING: Explosion hazard. Do not use oxygen for pressure testing. An explosion could occur during initial start-up.

VI Electrical

Installation wiring to the burner must conform to local codes, or, in their absence in the United States the National Electric Code ANSI/NFPA No. 70-1990, or latest edition; in Canada, to CSA standard C22.1, “Canadian Electrical Code Part 1”.

Use copper wires and provide disconnect and fuse protection for each INCINOMITE installation. Refer to SPECIFICATIONS, page 2, for ampacity. Confirm that the polarity is correct—hot wire to strip terminal L1, neutral L2 and that the neutral line is not subject to induced low voltage (check L2 to ground) from other equipment as that can affect the flame safeguard, causing it to malfunction. See Section X Flame Safeguard.

⚠ CAUTION: In order for the automatic cooling system to function, power must be maintained to burner strip terminal L1. Do not install any safety or on-off controls in the circuit between the fused disconnect switch and strip terminal L1. Optional remote control devices should be connected in place of, or in addition to, the switch or timer as indicted in Figure 2A or 2B Wiring Diagram.

NOTE: Optional 0-6 hour Timer may be substituted for the burner On-Off Switch. Kit is available with full conversion instructions.

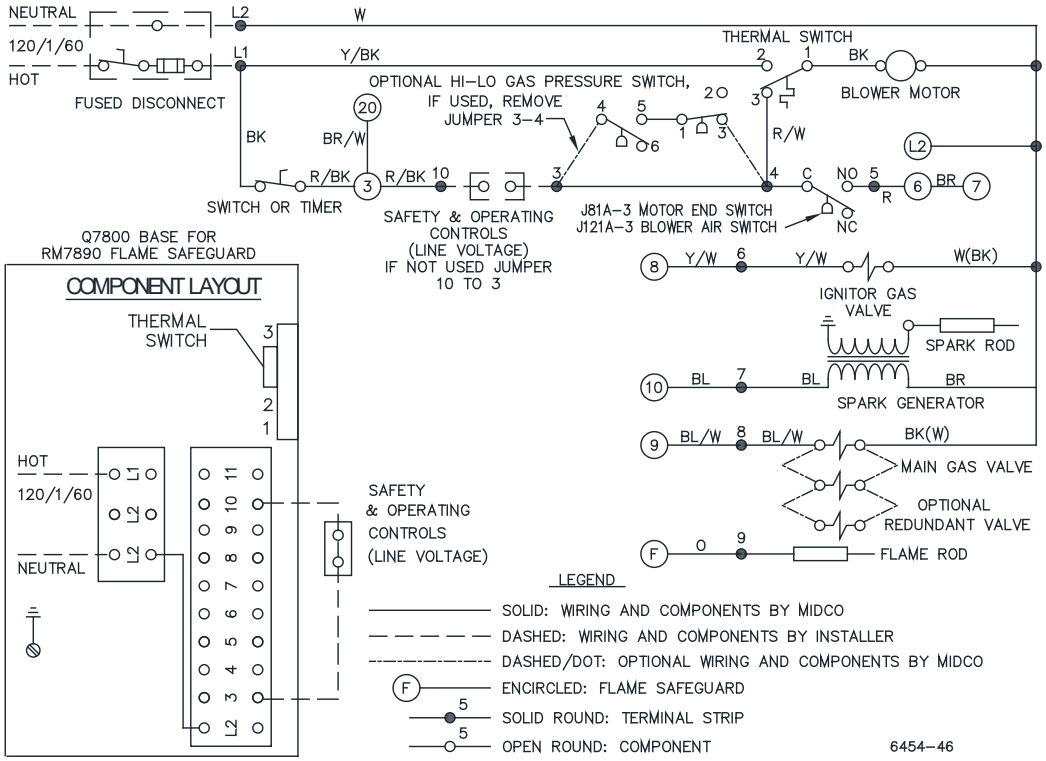

⚠ CAUTION: If a remote switch or timer is installed, remove or turn off the burner switch when using the remote control.

Figure 2A - Wiring Drawing (Effective 10/15/2007)

VI Electrical Continued

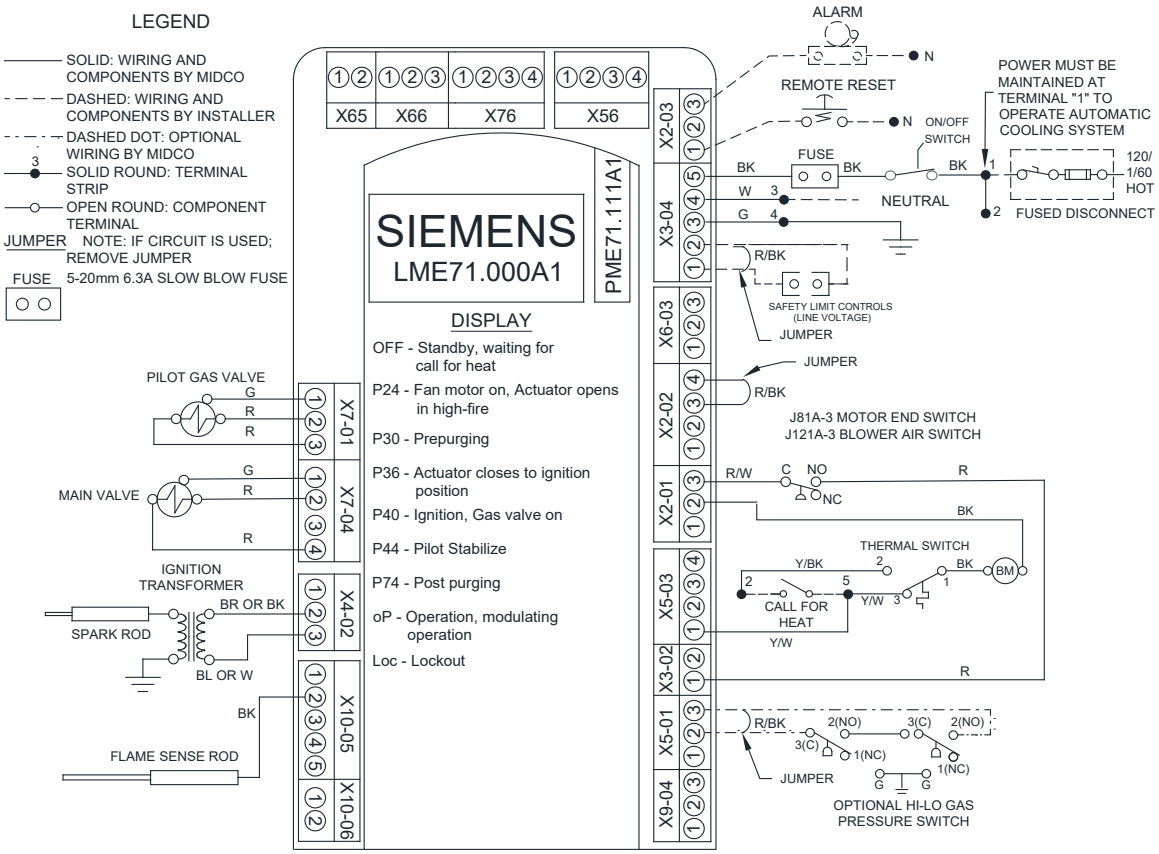

Figure 2B - Wiring Drawing with Siemens Control

VII Initial Start Up / Adjustment

Burners are suitable for use with NATURAL or PROPANE gas only.

If a standard NATURAL gas model is to be used with PROPANE gas, a conversion kit is available, which contains a PROPANE Main Gas Port, a PROPANE Ignitor Tee Orifice Fitting and a PROPANE label and conversion instructions.

As shipped, the Air Shutter is in the full open position and the Main Gas Input Adjuster 5 to 6 turns from full closed. Ignitor regulator is factory set for recommended outlet pressure of 3.5″ W.C. suitable for most applications.

⚠ **CAUTION: Ignition is automatic. Therefore, make ignitor or spark observations into incineration chamber only with Main Manual Shut-Off Valve closed.**

1. Check the burner piping and valves for gas leaks by applying a weak liquid soap solution to unions and joints with the gas supply on. Leakage will be indicated by the appearance of soap bubbles. Locate and correct all gas leaks before proceeding.

⚠ **WARNING: DO NOT USE OPEN FLAME.**

2. Confirm that the main gas Input Adjuster is 5 to 6 turns from full closed and that the Blower Air Shutter is fully open.

3. Close the Main Manual Shut-Off Valve and Manual Ignitor Gas Valve.

4. Purging the air from the gas supply line at this step will expedite the first light-off.

⚠ **CAUTION: Purge outside the building. Do not purge into the incineration chamber.**

5. Turn on the Fused Disconnect, Burner Switch or Timer and press relay reset button. Let motor run long enough to accomplish four air changes. Note that motor will continue to run after Flame Safeguard lockout occurs.

VII Initial Start Up / Adjustment Continued

6. Open the incinerator charging door making sure any **Door Open** interlock is temporarily bypassed.

7. Turn on Manual Ignitor Gas Valve only and press relay reset button. Trial for Ignitor Ignition: Flame Safeguard and motor are powered. There will be a delay until blower reaches operating speed and trips blower proving switch. When the blower proving switch is made, the Ignitor Solenoid Valve and Spark Generator are energized. Ignitor flame should light.

8. If ignitor fails to light during the trial prescribed for ignition and goes into Flame Safeguard lockout, it is probably due to air in ignitor gas line. Wait one minute and press relay reset button for several relight attempts. If the ignitor fails to light, turn off Manual Ignitor Gas Valve and repeat from step 5 above. Then, if necessary, refer to the Trouble Chart to isolate the problem. Refer to Section X for trial timings.

⚠ WARNING: Repeated unsuccessful attempts to light will result in accumulated gases in incineration chamber and chimney. To prevent these gases from reaching an explosive level, periodically purge the incineration chamber as described in Step 5.

9. Observe the ignitor flame. If it is weak, screw in the Ignitor regulator adjustment to increase the pressure. If it is excessively rich and large or floating from the ignitor tip, back off the regulator adjustment to reduce the pressure. Set the ignitor to a stable blue flame which burns firmly within the ignitor tip. Check flame signal on RM7800 series control using a voltmeter or on LME7 series control by holding the + button for 2-3 seconds ('FL1' will be displayed briefly, followed by the flame signal from 0-100%). Adjust ignitor regulator slowly for the highest, steady flame signal.

⚠ CAUTION: When adjusting the regulator, take note of the supply pressure. If gas supply pressure is below its specified range during adjustment, an over-fire condition could result when pressure returns to normal, particularly if the regulator adjustment screw is BOTTOMED OUT. ALWAYS confirm that at least the minimum rated pressure is being supplied to the ignitor during regulator adjustments, and NEVER BOTTOM OUT regulator screw. Operate air shutter throughout range to confirm Ignitor stability. Try several relights. Refer to Table 4.

10. Remove the Input Adjuster Cap (see Figure 3) and turn the Main Gas Input Adjusting Screw until the desired input rating is reached (refer to Table 2 or 3). Turning of adjustment screw counterclockwise increases gas flow; clockwise reduces gas flow. If Main Flame gas pressure requires adjustment, refer to Section V Piping.

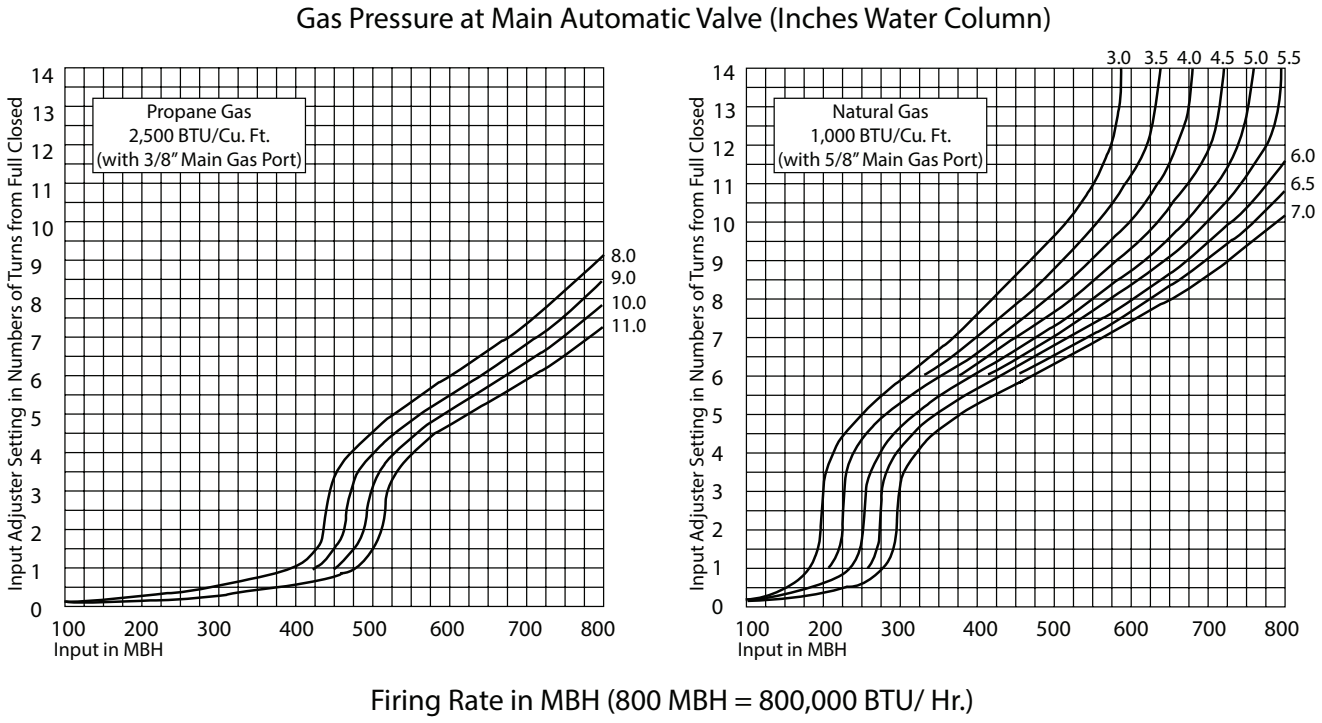

Table 2 - Firing Rate Curves for Model J81A-3

VII Initial Start Up / Adjustment Continued

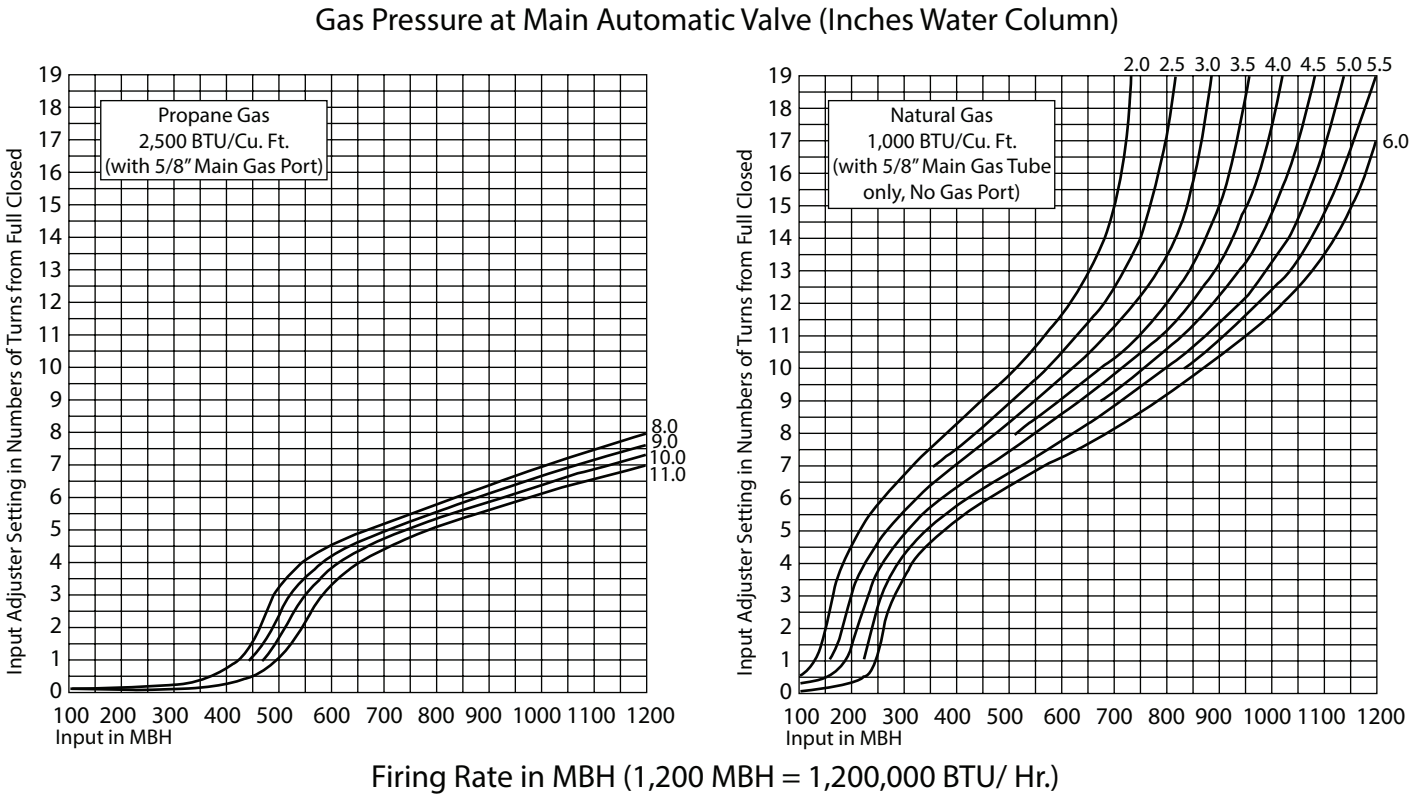

Table 3 - Firing Rate Curves for Model J121A-3

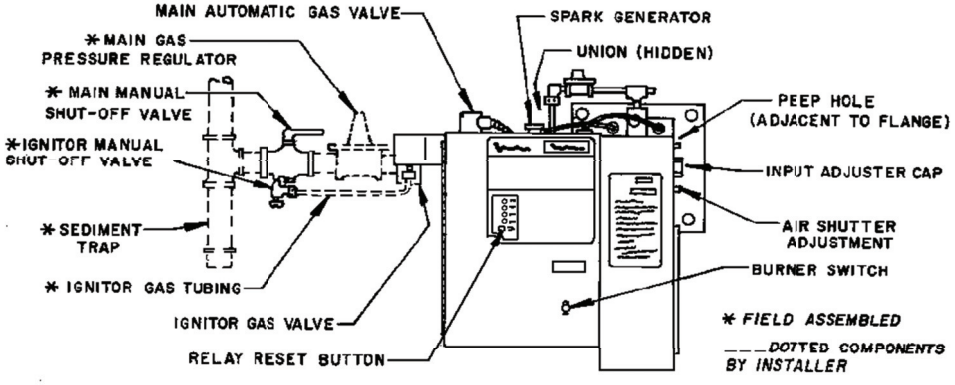

Figure 3 - Control Components (RM7800)

11. Reset the Blower Air Shutter to match the intended input, i.e. full open for maximum, closed for minimum or partially open for midrange. The Blower Air Shutter is factory set wide open. Adjust as necessary when, with combustion air available in the incineration chamber, it is desirable to increase the flame length, or to restrict the amount of excess air discharged into the incineration chamber when the burner input is below 450 MBH.

12. The actual NATURAL gas firing rate in BTU per hour can be determined by timing the gas meter. Accurately time the meter test dial for one revolution, convert to hourly cubic feet and multiply by the BTU per cubic foot value of your gas per formula. All other gas utilization equipment must be off.

VII Initial Start Up / Adjustment Continued

$$\frac{3600 \text{ x test dial size x BTU value}}{\text{no. of seconds for one rev. test dial}} = \text{BTU / Hr.}$$

Then divide by 1,000 for MBH value.

Example $\frac{3600 \text{ x } 1 \text{ x } 1000\ ^*}{20}$ = 180,000 BTU / Hr. = 180 MBH

For Propane gas, consult your supplier for method of determining firing rate.

* Approximate BTU value

13. Start and stop the burner several times to check its operation with the charging door open, and then with it closed. Remove any temporary Door Open bypasses installed in Step 6.

14. Test operation of any auxiliary operating and/or limit controls.

15. Load incinerator and make trial run. Confirm that the incineration chamber pressure stays within the range of 0 to minus 0.5″ W.C. for Model J81A-3 and 0 to minus 1.0″ W.C. for Model J121A-3.

⚠ WARNING: When the incinerator is located inside a building and a draft control is used, check that there is no spillage of flue products from the draft control.

16. **To shut off:** Turn Burner Switch or Timer off and close Main Manual Shut -Off Valve

_____

Service

⚠ WARNING: BE SURE THAT THE MANUAL VALVE AND BURNER DISCONNECT SWITCH ARE TURNED OFF BEFORE ANY PARTS ARE REMOVED FOR SERVICE.

VIII Ignitor and Regulator Assembly

The Ignitor and Regulator Assembly is removed as a unit. Disconnect the ignitor gas line and electrode wires, remove the two mounting screws and pull out the assembly.

When the ignitor gas pressure is in the proper range (see Table 4) and the electrodes are adjusted to the dimensions shown in Figure 5, any ignition problems are usually caused by lint, dust, corrosion, cracked electrode insulators, foreign matter in the blast tube or deterioration of ignitor ports in Retention Plate.

Ignitor trouble will be evidenced by failure of main burner ignition. It may also be indicated by poor or erratic relay response which cannot be remedied by ignitor gas adjustment, or it may cause frequent Flame Safeguard lockout. Check for dirt in the ignitor air and mixture passageways and check for obstructions in the ignitor ports. Also check electrode adjustments (see Figure 5). Replace any severely burned parts.

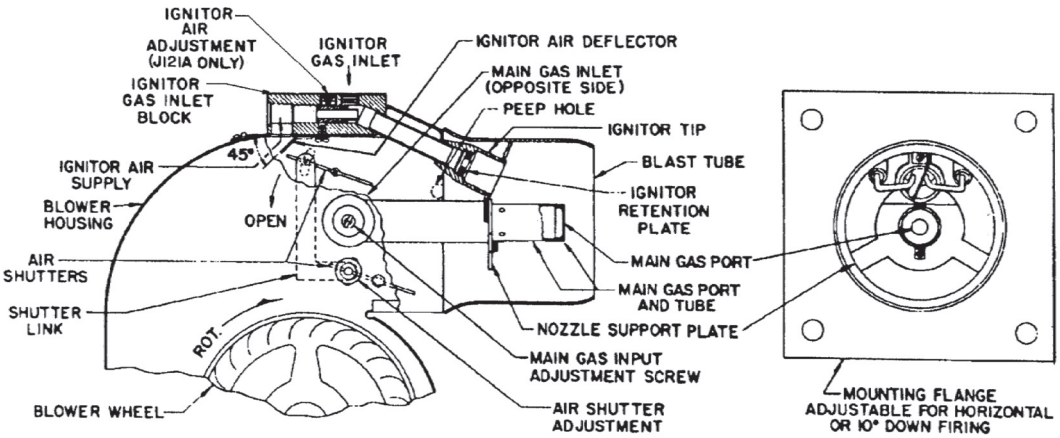

Figure 4 - General Burner Head Assembly

VIII Ignitor and Regulator Assembly Continued

Proper operation of the flame sensor rod can be checked by measuring the flame signal. With the Flame Safeguard energized and only the ignitor burning, a good reading should run steady 2 or more volts DC on RM7800 series controls and 60% or higher on LME7 series controls.

When servicing, clean the Ignitor Retention Plate ports and blow out the internal air and gas passages. Clean the Electrode Insulators and check them for hairline cracks. Also check the electrode ends and the Ground Barrier for serious corrosion or loss of metal. Replace any defective parts.

Make sure that there is no debris in the Blast Tube that could short out the Spark or Flame Electrode.

Clean the Ignitor Gas Orifice in Tee Orifice Fitting (see Figure 5) and check that the orifice size is correct per Table 4.

Check that the electrode ends are positioned and that the gap between the end of each electrode and the ground barrier is spaced per Figure 5.

Check that the Ignitor Air Deflector is at the correct angle (45°). See Figure 4.

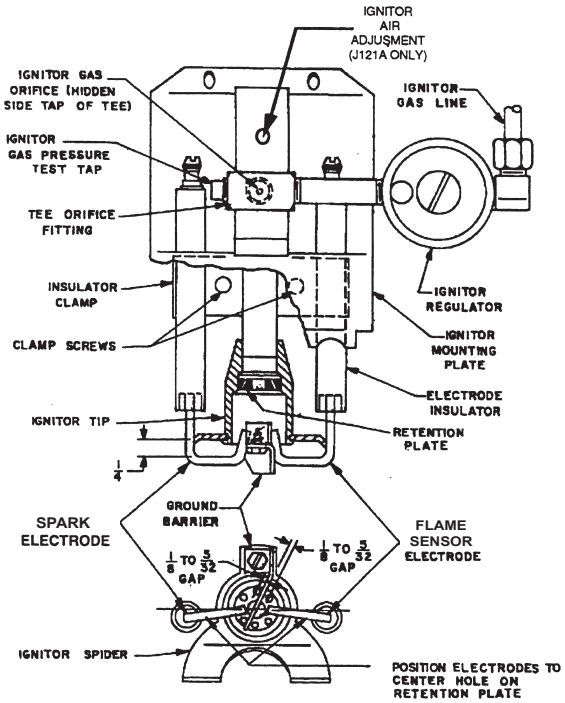

Figure 5 - Type "3" Ignitor and Regulator Assembly

Model	Type of Gas	Ignitor Orifice Diameter	Recommended Ignitor Gas Pressure	Ignitor Gas Rate
J81A-3	Natural	.052 (# 55 Dr.)	3.5″ W.C.	6 MBH
	Propane	.042 (# 58 Dr.)		7 MBH
J121A-3	Natural	.070 (# 50 Dr.)		13 MBH
	Propane	.063 (# 52 Dr.)		15 MBH

Table 4 - Ignitor Firing Rate

Inspect the electrode wire insulation for cracks or worn areas, or any contact with the burner frame. Dampness will facilitate electrical leakage to ground, which will cause ignition or flame signal failure.

SPARK TEST—Main Manual Shut-Off Valve must be off. Place the Ignitor Assembly on top of the burner with the electrode ends visible and good metal to metal contact between the Ignitor Mounting Plate and the burner chassis.

Connect the high voltage wire to the spark electrode. Spark should be visible during trial for ignition period and arc from the electrode end to the Ground Barrier. It should be audible and visible, though it is rather thin and difficult to see in bright light.

If the spark is not audible or visible it is leaking directly to ground. Before removing electrodes, check to make sure voltage is available by positioning the spark wire 1/8″ from the end of the electrode. If necessary, press relay reset button to recycle ignition sequence.

Disconnect Flame Electrode wire and switch the high voltage wire to the flame electrode and repeat test for insulator leakage.

⚠ **CAUTION: Do not indiscriminately change the ignitor gas orifice size as ignition troubles are rarely cured in this manner. The ignitor utilizes a premixed gas/air mixture and, as the air input is relatively fixed, any adjustment to the gas/air ratio that might be required for a specific application should be made by careful adjustment of the ignitor regulator to vary its outlet gas pressure. Pressure adjustments must be made when the gas is flowing. If cleaning and electrode adjustment does not eliminate an ignition problem, further checks are required. Refer to Trouble Chart.**

IX Ignitor Gas/ Air Adjustment (J121A-3 Only)

The ignitor assembly as shipped is pre-set during factory fire-testing and normally needs no adjustment except in installations where the air shutter is full open. The ignitor should not be adjusted until it is confirmed that good lightoffs are not possible with ignitor gas pressure adjustments only as described in Section VIII.

The Air adjustment screw is located under a plug button in the Ignitor Block about 1⁄2 inch behind the Ignitor Orifice (refer to Figure 4). A 5⁄64 (.078) inch hexagon wrench is required for adjustment. Pry up the plug button to expose air adjustment screw. Adjust the screw up or down to find the best Flame Signal or until repeatable and stable lightoffs are achieved. Ignitor airflow is decreased as the screw is turned clockwise, and increased as it is turned counterclockwise. Generally 3 to 5 turns up from full closed (screw bottomed out) works best.

When adjustments are completed, replace plug button to protect adjustment screw

---

X Flame Safeguard

⚠ WARNING: Explosion hazard. Do not use this device if it gets wet. It can malfunction and cause serious injury or death. Replace any device that has been wet.

Standard Incinomite J Series burners are equipped with a Honeywell RM7890 or a Siemens LME71 microprocessor based burner control employing a flame rectification system of flame detection. Burner construction for special codes and/or insurance requirements such as Factory Mutual or Industrial Risk Insurers (IRI) may require alternate controls, refer to Section XI Special Equipment. A safe start and run control sequence is provided with instantaneous response to presence or loss of flame signal. Flame failure response time is .8 seconds. Pilot Flame Establishing Period (PFEP) is field selectable from 4 or 10 seconds. The RM7890 features a plug in amplifier. Five LED's (light emitting diodes) are provided to display sequence information. Refer to the control literature for detailed operating information, configuration requirements, testing, and service. On the Siemens LME71, sequence information is displayed on the LED Display.

Initiate ("Power" LED is lit)
The RM7890 and the LME71 enters the INITIATE sequence when it is powered. The INITIATE sequence lasts for ten seconds unless the voltage or frequency tolerances are not met (refer to Honeywell RM7890 or the Siemens LME71 literature for criteria). When tolerances are met, the INITIATE sequence will restart. If the condition is not corrected and the hold condition exists for four minutes, the RM7890 and the LME71 will lock-out. Causes for hold conditions in the INITIATE sequence are in the Honeywell RM7890 or the Siemens LME71 literature.

Standby ("Power" LED is lit)
The RM7890 and the LME71 will be idle in this state of sequencing. When the burner switch, limits, operating limit controls, and all microprocessor monitored circuits are in the correct state for RM7890 or LME71 to continue, sequencing will advance to **IGNITION TRIAL**.

Ignition Trial
1. PILOT FLAME ESTABLISHING PERIOD (PFEP)
   A. The pilot valve ("PILOT" LED will be lit) and spark generator are energized.
   B. Flame must be proven by end of the 4 or 10- second PFEP to allow the sequence to continue. If flame is not proven by the end of PFEP, a safety shutdown occurs.

2. MAIN FLAME ESTABLISHING
After the ignition trials, and with the presence of flame, the main valve is energized and the "MAIN" LED will be lit. If a flame-out occurs, the RM7890 and the LME71 will lock-out or recycle within .8 seconds. Refer to Honeywell or the Siemens literature for proper configuration.

Run
The RM7890 and the LME71 will now be in RUN mode and will remain in run mode until the controller input opens, indicating that the call for heat has been satisfied or a limit has opened. Once this occurs the RM7890 or the LME71 will sequence back to the **STANDBY** mode.

Notes:
1. During STANDBY and during the RM7890 or the LME71 sequencing the "POWER" LED will blink every four seconds. This is normal.
2. The "ALARM" LED will be lit in the event of any flame failure.
3. To maintain proper operation of this device it MUST be electrically grounded. Refer to Honeywell RM7890 or the Siemens LME71 literature for criteria.

XI Special Equipment (OEM Versions)

Special equipment, either factory or field installed, can cause variations in the procedures and descriptions given in this manual. Generally, any burner ordered with special factory installed equipment will be supplied with the appropriate wiring diagram and related instruction manuals from the special equipment manufacturer. Consult these manual to identify any differences in construction, operation, and testing. Field installed special equipment is the responsibility of the installing contractor. For example, when a high/low gas pressure switch is used, the high gas pressure setting must be higher than the maximum manifold pressure during initial start-up and the low pressure setting must be set below the normal minimum inlet pressure to prevent nuisance shutdowns during the start-up procedure.

After the burner in started, the low pressure setting should be raised until the burner shuts off. Reduce the setting and set the low pressure switch to restart the burner. Reduce the high pressure setting until the burner shuts off. Then raise the setting slightly and reset the high pressure switch to restart the burner. Do not make the adjustments too close to trip points or nuisance shut downs may occur. Any time the burner gas supply is shut off with the main manual valve, the low pressure switch will require resetting.

If any doubt exists concerning burner operation when special equipment is involved, contact the installing contractor or MIDCO INTERNATIONAL INC..

XII Main Automatic and Ignitor Gas Valves

Both valves are single function on-off type with automatic closing on current failure. Replace entire valve if valve fails to open when power is applied or if leakage is detected on standby.

XIII Blower Assembly

Model J81A-3 uses a 1550 RPM shaded pole motor with auto-reset overload protection. It contains a centrifugal Interlock Switch which is connected in the control circuit to prevent burner operation if the motor fails. Model J121A-3 is equipped with 1/6 HP split phase 3450 RPM motor. It may contain either a manual or auto-reset overload protector. It has no interlock, this function being performed by an Air Pressure Switch on the burner. Both motors feature permanently lubricated ball bearings that require no routine oiling maintenance. Cleaning of the blower wheel is usually the only service required. Need for cleaning is required if the inlet screen or blower wheel shows an accumulation of dust and lint. The motor air cooling vents should also be cleaned at this time. If the motor must be replaced, disconnect the motor wires from the burner terminal strip and thermal switch. Remove the blower inlet screen and blower wheel and remove the motor case bolt nuts and lock washers. When remounting the blower wheel, the distance from the wheel and the outside of the blower housing air inlet side plate should be 5 or 6″.

XIV Thermal Switch

The Thermal Switch is a heat sensitive single pole double throw snap switch that energizes the blower motor to provide cooling air if, because of a heat back up through the burner when the motor is off, the temperature of the blower housing reaches 160° F. The thermal switch is not wired into the gas valve circuit and does not turn valve off when activated by heat back up.

The switch mechanism is a bi-metallic disc that snaps over when it is heated to the set temperature. The switch is mounted so that the disc bears against the side plate of the blower housing.

Testing the switch to prove that it is functional can be done by removing the ignitor assembly and blowing hot air through the opening toward the blower inlet. If hot air is not available, remove the switch and check for continuity. With the switch cool, there should be continuity between terminals 1 (black wire) and 3 (red/white). To simulate the “hot” condition, place the switch on a firm surface and apply finger pressure to the switch disc. When the disc “snaps”, there should be continuity between terminals 1 and 2 (yellow/black wire).

Make sure the switch or timer is calling for heat. Defective wiring or loose connections can simulate outlined below. Check associated wiring before replacing a component.

ELECTRICAL AND FLAME CHECKS MUST BE MADE IN THE ORDER LISTED.

1 Motor Will Not Run

A . Confirm 120 volts between strip terminals.

1. L3 and L1 (Honeywell) or 3 and 1 (Siemens): No voltage, fused disconnect off or fuse open.
2. L2 and 3 (Honeywell) or 3 and X3-04 1 (Siemens): No voltage, safety controls open.
3. L2 and 10 (Honeywell) or 3 and X3-04 2 (Siemens): No voltage, burner switch or timer open and/or remote switch or timer open.
4. L2 and 4 (Honeywell) or 3 and X5-01 2 (Siemens): No voltage, optional high or low gas pressure switch is tripped.
5. L2 (Honeywell) or 3 (Siemens) and Thermal switch terminal 1 (black wire):
   a. No voltage, thermal switch is defective.
   b. Voltage present, defective Motor.

2 Motor Runs Continuously But No Flame and Burner Housing Cool

A. Make certain Flame Safeguard lockout switch is not tripped.

⚠ **CAUTION: Tests are valid only during the 4 or 10 second trial for ignition. Main Manual Shut-Off Valve must be closed and Manual Ignitor Valve open.**

1. Confirm 120 volts on strip terminals L2 and 5 (Honeywell) or 3 and X3-02 1 (Siemens).
   a. Voltage present: Continue to Step 2.
   b. No voltage:
      J81A - Motor interlock switch defective.
      J121A - Blower air switch defective.
2. Confirm 120 volts between strip terminal L2 and terminal 6 (Honeywell) or 3 and xxxxxx (Siemens).
   a. Voltage present, continue to Step 3.
   b. No voltage, flame safeguard defective.
3. Confirm 120 volts on strip terminals L2 and 7 (Honeywell) or 3 and X4-02 3 (Siemens)
   a. Voltage present, continue to Step 4.
   b. No voltage, flame safeguard defective.
4. Check for ignition spark (spark length approximately 1/8″).
   a. Between spark generator hi-voltage terminal and ground: No spark, defective spark generator.
   b. Between spark electrode wire and chassis ground: No spark, spark generator defective.
   c. For checking spark gap between spark electrode and ground barrier, refer to Section VIII Ignitor and Regulator Assembly, Spark Test.
5. Connect manometer to ignitor gas pressure test tap, and check pressure during trial for ignition period.
   a. No pressure, confirm that pressure of at least 5.5″ W.C. is available at the inlet of the ignitor gas valve, and repeat Step 5. If still no ignitor gas pressure, ignitor gas valve defective.
   b. Ignitor gas pressure 3.0″ to 4.0″ W.C., continue with Step 6.
   c. Adjust the ignitor regulator to 3.5″ W.C. while gas is flowing.
6. Open the charging door, make sure any door open interlock is temporarily by-passed and repeat trial for ignition.
   a. Open main manual shut-off valve. With main flame present, close charging door, remove temporary door open interlock and check incineration chamber pressure. Burner peep hole can be used for access to obtain approximate reading. See Figure 3. Make sure sensing tube extends into the incineration chamber at least 6″. Pressure should be between 0″ to minus 0.5″ W.C. for J81A, 0″ to minus 1.0″ W.C. for J121A. If pressure is on the high negative side of the range, increase the ignitor flame gas pressure to 4.0″ to 5.0″ W.C.
   b. No flame present, clean and reset electrode assembly per Figure 5 and repeat Step 6a.

3 Ignitor Flame on Only During the 4 or 10 Second Trial for Ignition	A. With motor running, confirm 120 volts as follows: 1. Between strip terminals L1 and L3 (Honeywell) or 1 and 3 (Siemens): 120 volts present, voltage OK. 2. Between strip terminals L1 and ground (Honeywell) or 1 and ground (Siemens): 120 volts present, gound OK. 3. Between strip terminals L3 and ground (Honeywell) or 3 and ground (Siemens): No voltage, neutral OK. B. Follow test procedure as specified in Step 2A. 1. Disconnect flame electrode wire and check for continuity. 2. Connect DC voltmeter in test jack in amplifier. With ignitor flame on, reading should be at 2 or more volts DC and steady. Adjust ignitor gas pressure to obtain acceptable signal and note gas pressure and signal strength for future reference. C. If all checks listed above were satisfactory and the ignitor will not stay lit, flame safeguard defective.
4 Ignitor Lights But No Main Flame	A. Confirm 120 volts between strip terminals L2 and 8 (Honeywell) or 3 and X7-04 4 (Siemens). 1. 120 volts present, continue with Step B. 2. No voltage, flame safeguard defective. B. Connect manometer to main automatic valve downstream pressure tap. 1. No gas pressure when valve is energized. a. Confirm that pressure of at least 5.5″ W.C. NATURAL, 8.0″ W.C. PROPANE, is available at the inlet of the main automatic valve. b. Pressure at inlet side OK, main automatic valve defective.
5 Short Main Flame	A. Low gas pressure. B. Air shutter open too far. C. Input adjuster not set properly.
6 Long Hazy Main Flame	A. High gas pressure. B. Air shutter closed too far. C. Insufficient free air in incineration chamber. D. Dirty blower wheel. E. Input adjustor open too far for air shutter setting.
7 Gas Fails to Shut Off	A. Main automatic and/or ignitor gas valve defective. B. High gas pressure.

Midco® International Inc. - 4140 West Victoria Street - Chicago, Illinois 60646 - toll free: 866 705 0514
tel: 773.604.8700 - fax: 866.580.8700 - web: www.midcointernational.com - e-mail: sales@midcointernational.com

722
8470 70
Printed in USA